Quiz-1

~~Give~~ (1) → XOR Gate.

A	B	C	Y
0	0	0	0
0	0	1	1
0	1	0	1
0	1	1	0
1	0	0	1
1	0	1	0
1	1	0	0
1	1	1	1

So, $Y = \bar{A}\bar{B}C + \cancel{AB}\,\bar{A}B\bar{C} + A\bar{B}\bar{C} + ABC$.

NMOS –

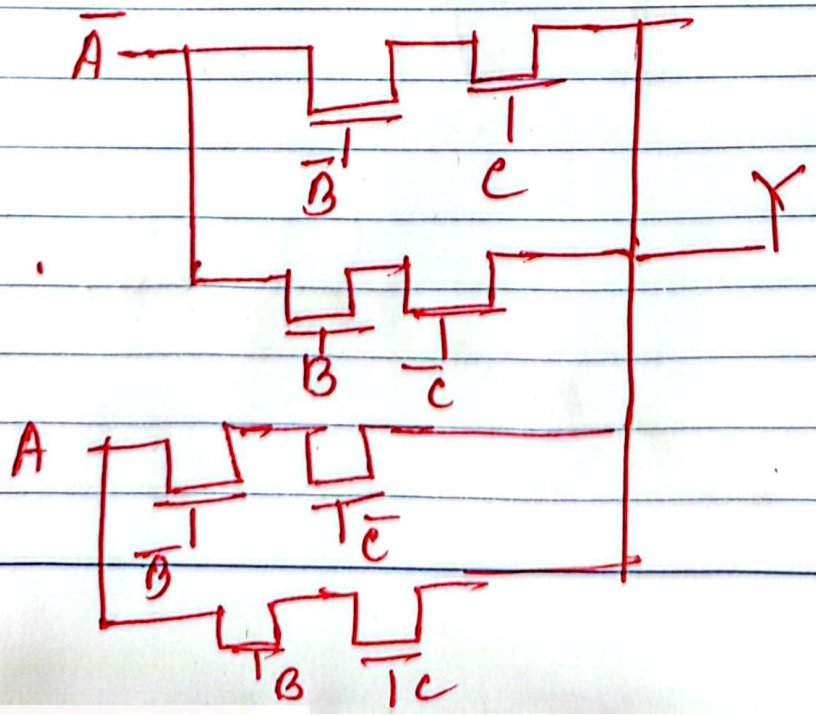

(other combinations are also valid)

(2) → (+) D Latch + (-ve) D latch = Neg edge FF

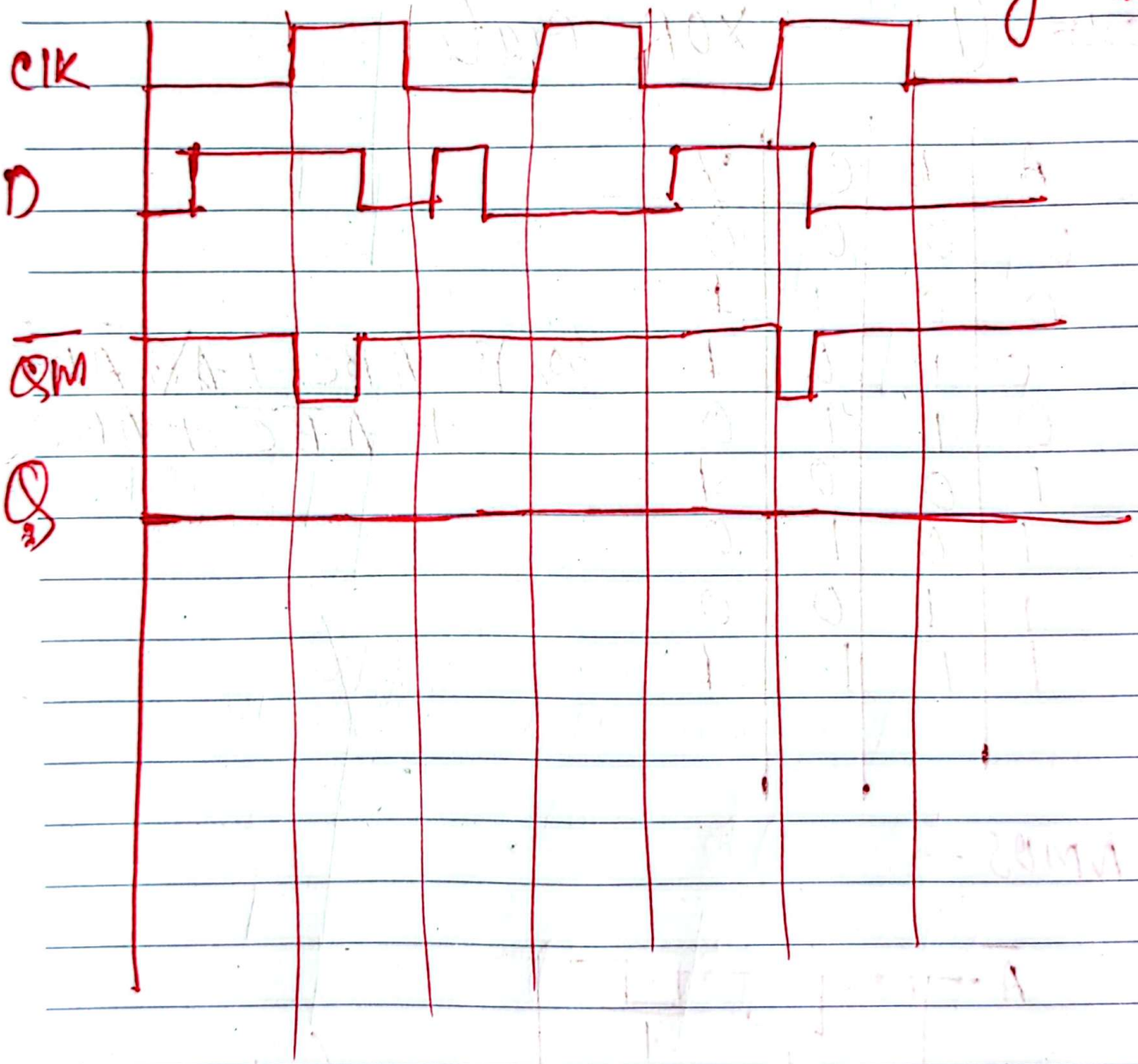

Quiz - 2

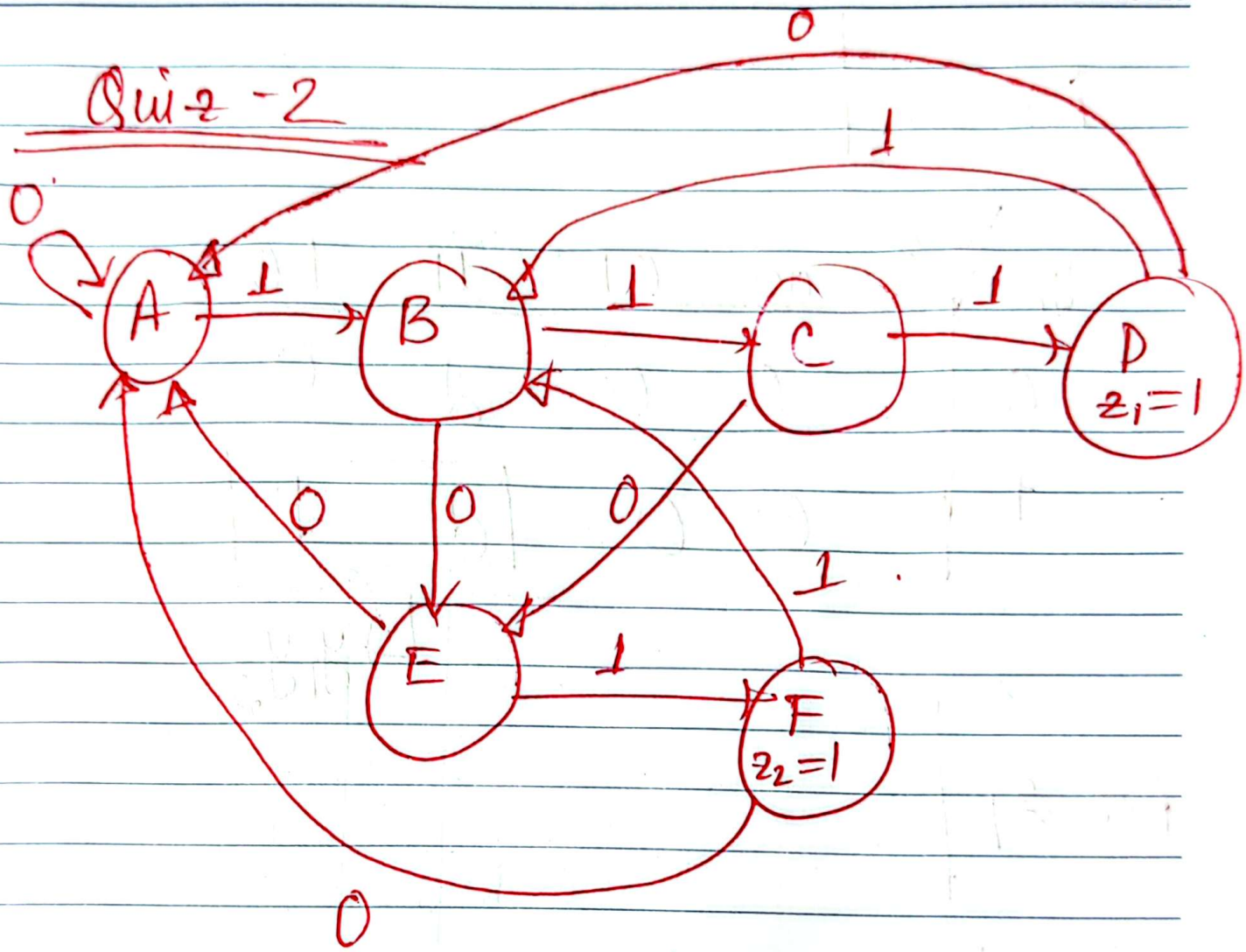

State table

P.S	Next State W=0	Next State W=1	Output z_1	Output z_2
$y_3y_2y_1$	$Y_3Y_2Y_1$	$Y_3Y_2Y_1$		
A (000)	A (000)	B (001)	0	0
B (001)	E (100)	C (010)	0	0
C (010)	E (100)	D (010)	0	0
D (011)	A (000)	B (001)	1	0
E (100)	A (000)	F (101)	0	0
F (101)	A (000)	B (001)	0	1
G (110)	ddd	ddd	d	d
H (111)	ddd	ddd	d	d

DATE / / SA SU MO TU WE TH FR

For Z_2

y_1 \ y_3y_2	00	01	11	10
0	0	0	d	0
1	0	0	d	1

$\rightarrow y_1y_3$

for Z_1

y_1 \ y_3y_2	00	01	11	10
0	0	0	d	0
1	0	1	d	0

$\rightarrow y_2y_1$